Family datasheet

Diablo



Product description

Diablo is a compact 3-phase LED spotlight with integrated power supply and aluminum heatsink with 50,000 hours lifetime. Available in 3 power options, wide range of color temperatures (2700K-4000K) with CRI 80+/90+. Four light distribution types (15°, 24°, 36°, 60°) and DALI control option available. Ideal for commercial spaces, showrooms and households. 5-year warranty.

LED 220-240V 50-60Hz IP20

Technical description

Mains voltage	220 - 240V AC, 50/60Hz
Connection method	3-phase track adapter
IP rating	20
Protection class	II
Light source	LED
Switching type	Non-dimmable , DALI
CRI	80, 90
CCT	2700K, 3000K, 3100K, 3500K, 4000K
Lumen output	1793-3879 lm
Efficiency	Up to 149 lm/W
Power consumption	13-27 W

Optical system	Lenses
Optical part material	PMMA
Housing material	Die-cast aluminium
Surface finish	Powder coated
Ambient temperature	0 to +25°C
Service lifetime (L80 B10)	50 000h
Warranty	5 years

Dimensions

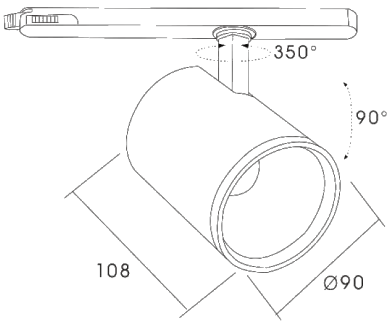

Light distribution curves

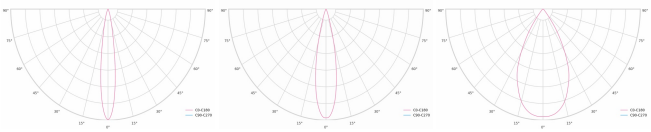

15° 24° 60°

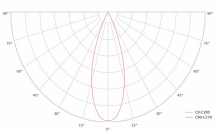

36°

Available housing colors

RAL 9005 RAL 9003

Product codes

The technical specifications of the luminaire are determined through the combination of these attributes, which result in a unique product code.

Order code example: **DIABLO-L-827-1-15-BL**

Attribute	Value	Code
Model	Diablo	DIABLO-
Version	S	S
	M	M
	L	L
CCT	2700k (CRI 80+)	827
	2700k (CRI 90+)	927
	3000k (CRI 80+)	830
	3000k (CRI 90+)	930
	3100k (CRI 80+)	831
	3100k (CRI 90+)	931
	3500k (CRI 80+)	835
	3500k (CRI 90+)	935
	4000k (CRI 80+)	840
	4000k (CRI 90+)	940
Dimming	Non-dimmable	1
	DALI	2
Light distribution	15°	15
	24°	24
	36°	36
	60°	60
Housing Color	Black	BL
	White	WH

Optional products

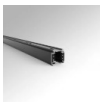
PRO-0410

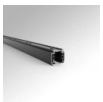
PRO-0420


PRO-0431L


PRO-0431R


PRO-0432


PRO-0433


PRO-0434


PRO-0437

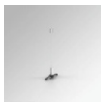
PRO-EZ0449


PRO-M435


PRO-M436


PRO-M438