Family datasheet

Diablo Art



Product description

Light that tells the truth about colour.

Track spotlight for galleries, museums and showrooms

A painting should look the way the artist painted it — not the way a light fitting tints it. Diablo Art therefore uses a full spectrum close to daylight: reds stay red, skin tones in a portrait stay alive, a white canvas stays white. With colour rendering of CRI 97 it ranks among the most faithful light sources installed in exhibition spaces today. Every spotlight in the room emits the same shade of white, so a wall with twenty paintings doesn't end up with twenty different whites. Four beam widths from narrow spot to wide flood, DALI dimming, black or white housing. Fits standard 3-circuit track and replaces an existing spotlight without touching the ceiling. 5-year warranty.

Technical description

Mains voltage	220 - 240V AC, 50/60Hz
Connection method	3-phase track adapter
IP rating	20
Protection class	II
Light source	LED
Switching type	Non-dimmable , DALI
Lumen output	1232-2332 lm
Efficiency	Up to 89 lm/W
Power consumption	13-27 W

Optical system	Lenses
Optical part material	PMMA
Housing material	Aluminium
Surface finish	Powder coated
Ambient temperature	0 to +25°C
Service lifetime (L80 B10)	50 000h
Warranty	5 years

Dimensions

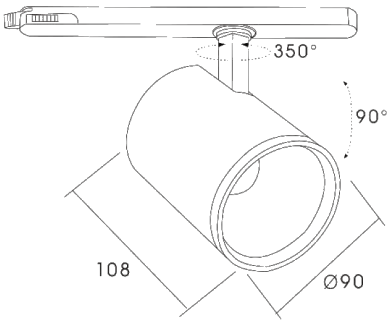

Light distribution curves

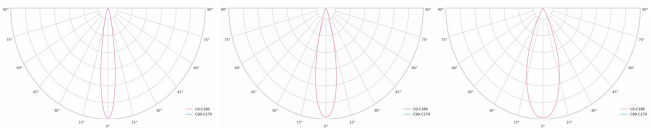

15° 24° 36°

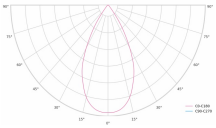

60°

Available housing colors



RAL 9005 RAL 9003

Product codes

The technical specifications of the luminaire are determined through the combination of these attributes, which result in a unique product code.

Order code example: **DIABLOART-BL-L-1-15**

Attribute	Value	Code
Model	Diablo Art	DIABLOART-
Housing Color	Black	BL
	White	WH
Version	S	S
	M	M
	L	L
Dimming	Non-dimmable	1
	DALI	2
Light distribution	15°	15
	24°	24
	36°	36
	60°	60