Technical datasheet

SQEA-S-830-2



Product description

Square easy is a 595x595 mm LED panel with state-of-the-art LED technology and LED source with 50,000 hours lifetime. Available in 3 power options, color temperatures 3000K/4000K with CRI 80+. Steel body with PMMA diffuser for optimal light distribution and DALI control option available. Fully compatible with existing lighting infrastructure. Ideal for offices, halls and commercial spaces. 5-year warranty.

LED | 220-240V 50-60Hz | IP20 IP40 | CE | UGR < 19 | CCT 3000 k | CRI 80+

Product technical data

Mains voltage	220 - 240V AC, 50/60Hz
Connection method	Plug-in terminal
Dimming type	DALI
IP rating	40/20
Protection class	II
Ambient temperature	0 to +30 °C
Light source	LED
Colour temperature	3000k
Color rendering index	80
Rated luminous flux	3,520 lm
Connected load	22.00 W
Luminous efficacy	160.0 lm/W

Optical system	Diffuser
Optical part material	PMMA
Housing material	Steel
Surface finish	Powder coated
Service lifetime (L80 B10)	50 000 h
Warranty	5 years

Dimensions

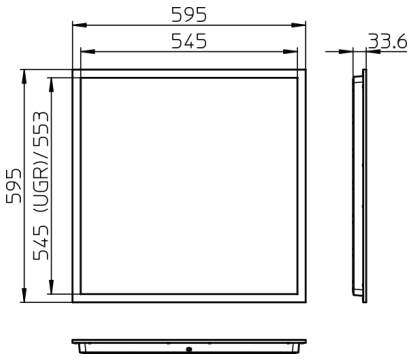

Light distribution

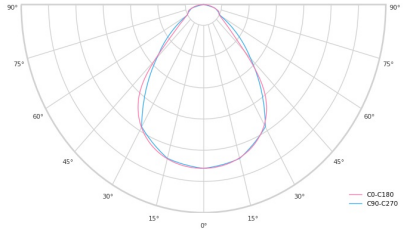

Optional products

Square Easy frame

Square springs
Code: SQ Springs



Square suspension kit