Technical datasheet

DIABLOFD-M-MV-2-36-BL



Product description

Diablo Food is a compact 3-phase LED spotlight with integrated power supply and aluminum heatsink with 50,000 hours lifetime. Available in 3 power options with specialized spectra for food lighting (Bread, Meat Pink, Meat Vivid). Four light distribution types (15°, 24°, 36°, 60°) and DALI control option available. Ideal for food stores, restaurants and showrooms. 5-year warranty.

LED 220-240V 50-60Hz IP20

Product technical data

Mains voltage	220 - 240V AC, 50/60Hz
Connection method	3-phase track adapter
Dimming type	DALI
IP rating	20
Protection class	II
Ambient temperature	0 to +25 °C
Light source	LED
Rated luminous flux	1,705 lm
Connected load	19.33 W
Luminous efficacy	88.2 lm/W

Ripple	3 %
DALI address	1
Standby power	0.50 W
Inrush current	5 A
Inrush time	50 µs
Optical system	Lenses
Optical part material	PMMA
Housing material	Die-cast aluminium
Surface finish	Powder coated
Height	132.00 cm
Diameter	90.00 cm
Weight	0.80 kg
Service lifetime (L80 B10)	50 000 h
Warranty	5 years

Dimensions

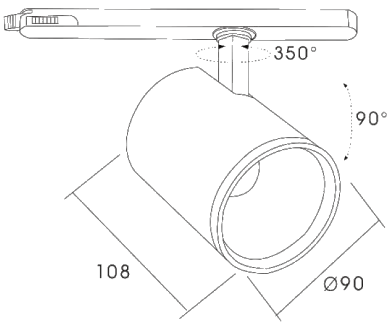

Light distribution

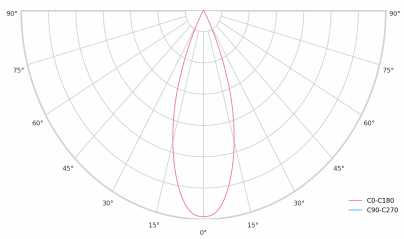

DALI 2

DALI (Digital Addressable Lighting Interface) is an international standard for digital lighting control systems. It enables individual control of each luminaire in the network using digital signals - unlike traditional analog solutions.

Key DALI2 innovations:
Advanced diagnostic capabilities
Better fault reporting and device status
Enhanced scene programming options
Support for RGB/RGBW and tunable white