# Technical datasheet

## DIABLO-L-835-2-24-BL



### Product description

Diablo is a compact 3-phase LED spotlight with integrated power supply and aluminum heatsink with 50,000 hours lifetime. Available in 3 power options, wide range of color temperatures (2700K-4000K) with CRI 80+/90+. Four light distribution types (15°, 24°, 36°, 60°) and DALI control option available. Ideal for commercial spaces, showrooms and households. 5-year warranty.

LED 220-240V 50-60Hz IP20 CCT 3500 k CRI 80+ DALI 2

### Product technical data

| | |
|---|---|
| Mains voltage | 220 - 240V AC, 50/60Hz |
| Connection method | 3-phase track adapter |
| Dimming type | DALI |
| IP rating | 20 |
| Protection class | II |
| Ambient temperature | 0 to +25 °C |
| Light source | LED |
| Colour temperature | 3500k |
| Color rendering index | 80 |
| Rated luminous flux | 3,806 lm |
| Connected load | 27.58 W |
| Luminous efficacy | 138.0 lm/W |
| Ripple | 3 % |
| DALI address | 1 |
| Standby power | 0.50 W |
| Inrush current | 5 A |
| Inrush time | 50 µs |
| Optical system | Lenses |
| Optical part material | PMMA |
| Housing material | Die-cast aluminium |
| Surface finish | Powder coated |
| Height | 132.00 cm |
| Diameter | 90.00 cm |
| Weight | 0.80 kg |
| Service lifetime (L80 B10) | 50 000 h |
| Warranty | 5 years |

### Dimensions

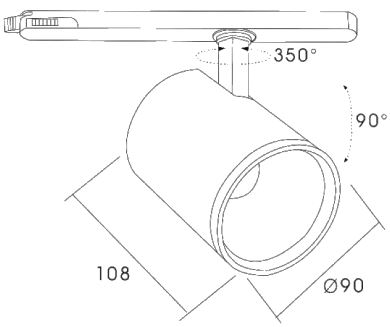


### Light distribution

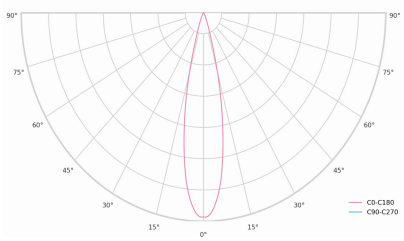

## Optional products

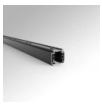
PRO-0410

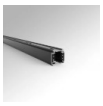
PRO-0420

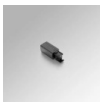
PRO-0431L


PRO-0431R


PRO-0432


PRO-0433


PRO-0434


PRO-0437


PRO-EZ0449


PRO-M435


PRO-M436


PRO-M438

## DALI 2

**DALI** (Digital Addressable Lighting Interface) is an international standard for digital lighting control systems. It enables individual control of each luminaire in the network using digital signals - unlike traditional analog solutions.

**Key DALI2 innovations:**
Advanced diagnostic capabilities
Better fault reporting and device status
Enhanced scene programming options
Support for RGB/RGBW and tunable white