Technical datasheet

DIABLO-M-840-1-24-WH



Product description

Diablo is a compact 3-phase LED spotlight with integrated power supply and aluminum heatsink with 50,000 hours lifetime. Available in 3 power options, wide range of color temperatures (2700K-4000K) with CRI 80+/90+. Four light distribution types (15°, 24°, 36°, 60°) and DALI control option available. Ideal for commercial spaces, showrooms and households. 5-year warranty.

LED | 220-240 V 50-60 Hz | IP20 | CCT 4000 k | CRI 80+

Product technical data

Mains voltage	220 - 240V AC, 50/60Hz
Connection method	3-phase track adapter
Dimming type	Non-dimmable
IP rating	20
Protection class	II
Ambient temperature	0 to +25 °C
Light source	LED
Colour temperature	4000k
Color rendering index	80
Rated luminous flux	2,842 lm
Connected load	19.11 W
Luminous efficacy	148.7 lm/W

Ripple	5 %
Inrush current	7 A
Inrush time	28 µs
Optical system	Lenses
Optical part material	PMMA
Housing material	Die-cast aluminium
Surface finish	Powder coated
Height	132.00 cm
Diameter	90.00 cm
Weight	0.80 kg
Service lifetime (L80 B10)	50 000 h
Warranty	5 years

Dimensions

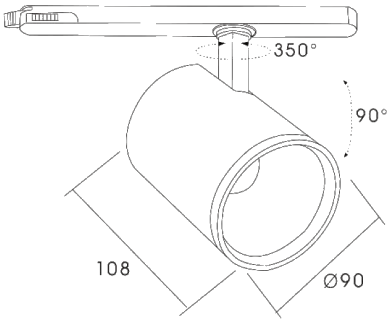

Light distribution

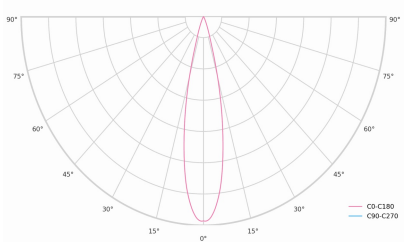

Optional products

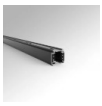
PRO-0410

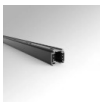
PRO-0420

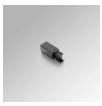
PRO-0431L


PRO-0431R


PRO-0432


PRO-0433


PRO-0434


PRO-0437


PRO-EZ0449


PRO-M435


PRO-M436


PRO-M438